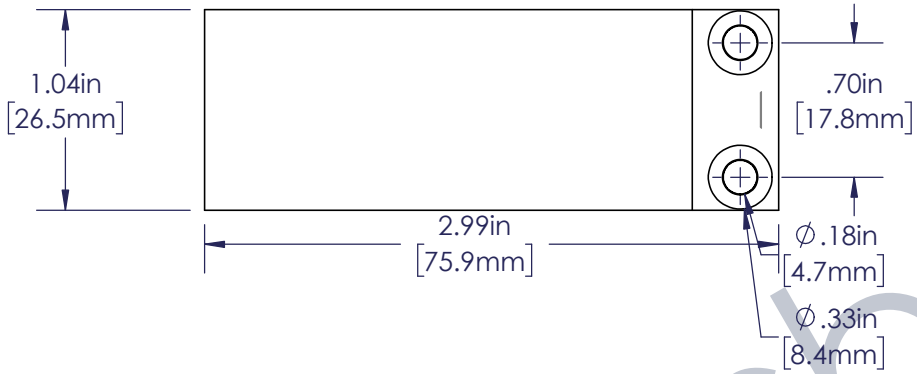

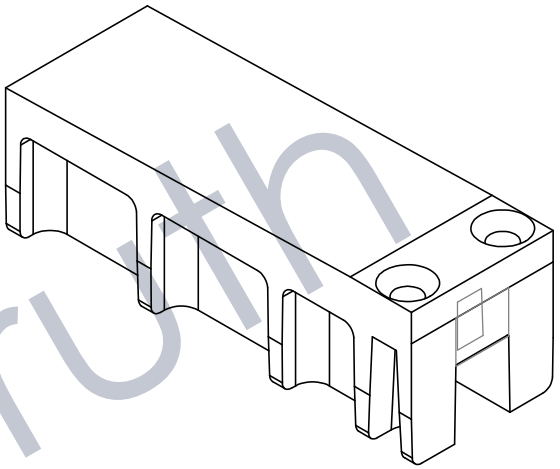

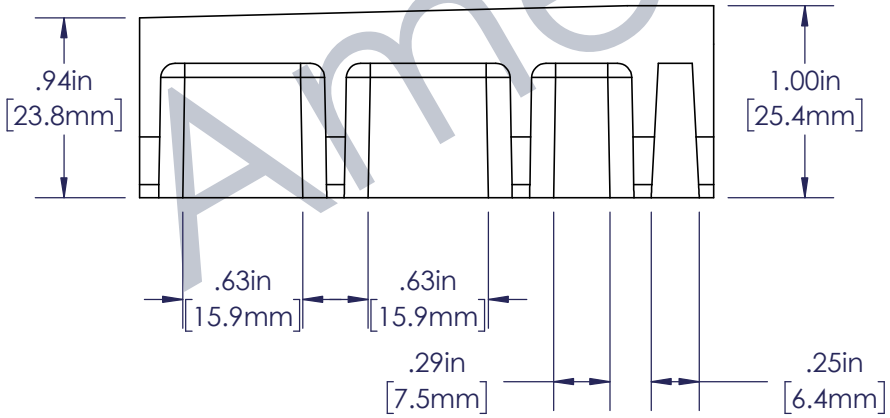

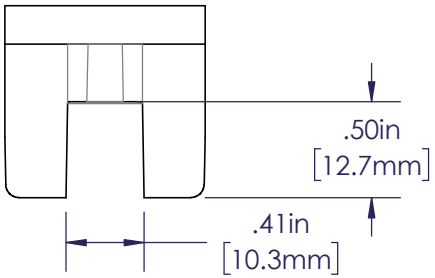

CUSTOMER PAGE

AmesburyTruth™
Engineered Solutions. Trusted Results.

INTERPRET PER: ASME Y14.5M-2009

UNITS: INCH

THIRD ANGLE PROJECTION

DRAWING TITLE: BOLT GUIDE

SCALE: 1:1

SHEET 1 OF 1

DRAWING #: P-5110-33